W e · s u p p o r t · t h e

i n n o v a t i o n s · o f · c u s t o m e r s

Leak - Proof Flow & Control Solution Partner

The Best Partner
for Value Creation

S-LOK® Needle Valves & 3way Test Cock Valves

HanSun

한선엔지니어링(주)
HANSUN ENGINEERING CO., LTD.

Needle Valves

SNV SERIES

SNV50 Series 3~5

SBNV60 Series 6~8

High Pressure Needle Valves

SHNV100 SERIES

SHNV100 Series 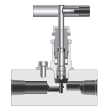 9~10

Union Bonnet Needle Valves

SUNV60 SERIES

SUNV60 Series 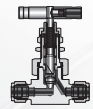 11~15

3way Test Cock Valves

STV SERIES

STV Series 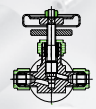 16~17

SNV50 Series 5000psi Integral Bonnet Needle Valves

Features

- Pressure rating up to 5000psi(344bar)@100°F(38°C).
- Temperature rating from -65°F(38°C) to 450°F(232°C). with standard PTFE packing, and up to 600°F(315°C). with optional PEEK packing.
- Choice of materials : Standard S316 and available in alloy 400 and Brass.
- Available sour Gas service per NACE MR0175.
- Every valve is 100% factory tested with the Nitrogen @1000psi.

Design

- Applications : General purpose gas, water and oil.
- Variety stem tips include Vee, Regulating and Soft-seat with Kel-F.
- Orifice sizes : from 0.08in(2.0mm) to 0.375in(9.5mm).
- Flow Coefficients(Cv) : from 0.09 to 1.8.
- Forged body with straight and angle patterns.
- Panel mounting : from 3.17mm to 6.35mm.
- Stem threads are rolled and hard chrome-plated for maximum service life.
- Packing materials : Standard PTFE and optional PEEK packing for high temperature.
- Packing nut enables easy external adjustments to ensure leak-free stem seal.
- Variety of End connections include S-LOK, NPT & ISO threads Male/Female.
- Standard Round handle is Black Phenolic Knop and optional Bar Handle with S316.

Technical Data

Temperature - Working Pressure

The class rating and rated working pressure are the way that ASME standards simplify the design process.
The pressure rating is governed by the allowable stress for each different material group, class rating and service temperature.

ASME Material Group		TABLE 2-2.2		N/A		TABLE 2-3.4	
ASME CLASS Rating		2080		N/A		1500	
Material Name		S316		Brass		Alloy 400	
Temperature @pressure, °F(°C)		psig	(bar)	psig	(bar)	psig	(bar)
-65°F(-54°C) up to	100°F(38°C)	5000	(344)	3000	(206)	3000	(206)
	200°F(93°C)	4295	(295)	2350	(161)	2640	(181)
	300°F(148°C)	3875	(266)	2050	(141)	2470	(170)
	350°F(176°C)	3710	(255)	1470	(101)	2430	(167)
	400°F(204°C)	3560	(245)	390	(26)	2390	(164)
	450°F(232°C)	3435	(236)	-		2380	(163)

Pressure ratings of valves with S-LOK end connections are determined by the tubing material and wall thickness.
Note Pressure rating of valve is sometimes limited to the working pressure of pipe ends and the tubing connected.

Temperature & Pressure Rating with Packing and Body Material

Valve Material	Stem	with PTFE packing (Standard)		with PEEK packing (Optional)	
		Temperature °F(°C)	Pressure Rating @100°F(37°C)	Temperature °F(°C)	Pressure @Temp. Rating psig (bar)
Stainless Steel S316	Metal to metal (Vee & Regulating)	-65°F to 450°F (-54°C to 232°C)	5000psig (344bar)	-65°F to 600°F (-54°C to 315°C)	3130psig (215bar)
	Soft Seat (Kel-F)	-65°F to 200°F (-54°Cto 93°C)		-65°F to 200°F (-54°Cto 93°C)	
Brass	Metal to metal (Vee & Regulating)	-65°F to 400°F (-54°C to 204°C)	3000psig (206bar)	-65°F to 400°F (-54°C to 204°C)	3000psig (206bar)
	Soft Seat (Kel-F)	-65°F to 200°F (-54°Cto 93°C)		-65°F to 200°F (-54°Cto 93°C)	
Alloy 400 (Monel)	Metal to metal (Vee & Regulating)	-65°F to 450°F (-54°C to 232°C)	3000psig (206bar)	-65°F to 500°F (-54°C to 260°C)	2370psig (162bar)
	Soft Seat (Kel-F)	-65°F to 200°F (-54°Cto 93°C)		-65°F to 200°F (-54°Cto 93°C)	

Flow Coefficient (Cv) with Number of Handle Turns

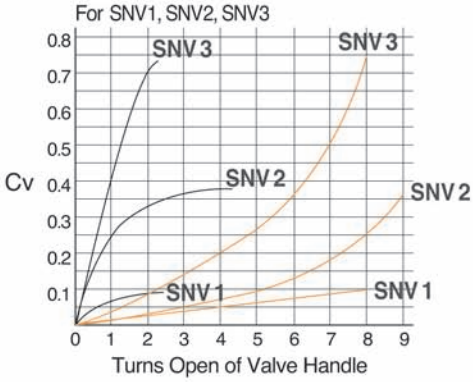

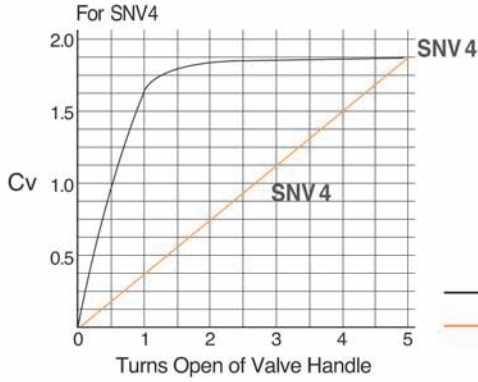

Vee tip and soft seat
Regulating stem

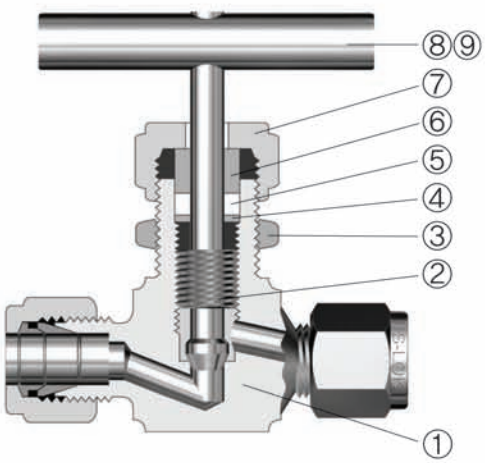

Materials of Construction

Item	Description		Material / ASTM Specification		
			S316	BRASS	Alloy 400
1	Body		S316	Brass	Alloy 400/B564
2	Stem	Vee Stem	Chrome plated S316	S316	Alloy R-405/B164
		Soft Seat Stem			
		Regulating Stem			
2a	Stem Tip (Soft Seat)		Kel-F(PCTFE)		
3	Panel Nut		S316	Brass	Alloy R-405/B164
4	Packing Ring		S316	Brass	Alloy R-405/B164
5	Packing		Standard PTFE, Optional PEEK		
6	Gland		S316	Brass	Alloy R-405/B164
7	Packing Nut		S316	Brass	S316
8	Knop Handle		Black phenolic knop		
	Bar Handle		S316		
9	Set screw		Stainless steel		

Wetted parts are listed in orange color.
Standard Lubrication : Fluorocarbon based.

Mounting as standard

Body Size		SNV1	SNV2	SNV3	SNV4
Panel Hole		13.5mm		19.8mm	26.0mm
Panel Mount Thickness	Min	3.17mm			
	Max	6.35mm			

Caution : Packing adjustments may be required during the valve is mounted.

· Sour Gas Service

-Sour Gas Service is provided to meet NACE Standard MR 0175.

· Handle

-Black phenolic knop is standard all body valves.
-Stainless Steel bar is available as an option.

Choice of Stem Tip's available

Vee Stem	Regulating Stem	Soft Seat(3 PCS)
For pressure tightness even at elevated temperatures	For flow rate control	For repetitive shut-off

• Testing

-Every valve is factory tested for bubble-tight leakage at both seat and stem packing with nitrogen at 1000psi(69bar).
-Seats have a maximum allowable leak rate of 0.1sccm **Hydrostatic Shell tests** is performed optional with water at 1.5 times the working pressure.

• Safety in Valve Selection

-When selecting a valve, the total system design must be considered to ensure safe, trouble-free performance. Valve function, materials compatibility, adequate ratings, proper installation, operation, and maintenance are the responsibility of the system designer and user.

Caution : **Packing adjustments may be required during the valve's service life.**
Extreme Temperature fluctuations may require packing nut adjustment.

Ordering Information and Table of Dimensions

Inline Pattern

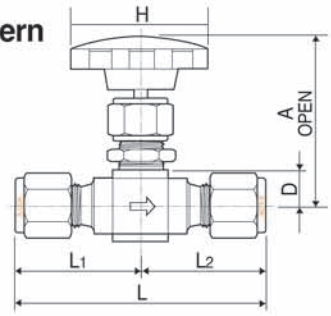

Bar Handle

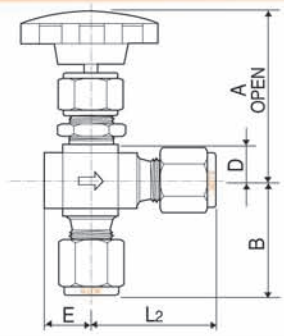

Angle Pattern

Valve Ordering Number		Orifice (mm)	Cv	End Connection Inlet	End Connection Outlet	Dimensions (mm) A	B	L	L_1	L_2	E	D	H	H_1
SNV1	F-2N	2.0	0.09	1/8″ Female NPT		61	21	42	21	21	9.5	11	35	32
	M-2N			1/8″ Male NPT				42	21	21				
	MS-2N2T			1/8″ Male NPT	1/8″ S-LOK			47		26				
	S-2T			1/8″ S-LOK			26	52	26	26				
	S-3M			3mm S-LOK										
SNV2	F-2N	4.4	0.37	1/8″ Female NPT		61	21	42	21	21	9.5	11	35	45
	M-2N			1/8″ Male NPT										
	M-4N			1/4″ Male NPT			25	50	25	25				
	MS-4N4T			1/4″ Male NPT	1/4″ S-LOK			54		28.8				
	S-6M			6mm S-LOK			29	57.6	28.8	28.8				
	S-4T			1/4″ S-LOK										
	S-8M			8mm S-LOK			30	59.2	29.6	29.6				
SNV3	F-4N	6.4	0.73	1/4″ Female NPT		77	28	56	28	28	13	13.5	47	64
	F-4R			1/4″ Female ISO Tapered										
	MF-4N			1/4″ Male NPT	1/4″ Female NPT									
	MS-4N6T			1/4″ Male NPT	3/8″ S-LOK			61.2		33.2				
	M-6N			3/8″ Male NPT			29	58	29	29				
	MS-6N6T			3/8″ Male NPT	3/8″ S-LOK			62.2		33.2				
	MS-6N8T			3/8″ Male NPT	1/2″ S-LOK			65		36				
	S-10M			10mm S-LOK			33	66.4	33.2	33.2				
	S-6T			3/8″ S-LOK										
	S-12M			12mm S-LOK			36	72	36	36				
	S-8T			1/2″ S-LOK										
SNV4	F-6N	9.5	1.80	3/8″ Female NPT		99	38	76	38	38	19	19	63	76
	F-6R			3/8″ Female ISO Tapered										
	F-8N			1/2″ Female NPT										
	F-8R			1/2″ Female ISO Tapered										
	M-8N			1/2″ Male NPT										
	MF-8N			1/2″ Male NPT	1/2″ Female NPT									
	S-8T			1/2″ S-LOK			49	97	48.5	48.5				
	S-12T			3/4″ S-LOK										

All dimensions shown are for reference only and are subject to change. Dimensions with S-LOK nuts are in finger-fight position.
Patterns : To order angle pattern, use-A as a suffix to the valve ordering number. *Example : SNV1-F-2N-A*

• Ordering Information

SNV3	S	8T	A	R	BH	SG	S6
Series Designator by Orifice Size	**End Connection Designator**	**Inlet-Outlet Size Designator**	**Flow Designator**	**Stem Designator**	**Handle Designator**	**Sour Gas Designator**	**Body Material Designator**
			• Nil : Straight • A : Angle Pattern	• Nil : Vee Stem • R : Regulating • K : Soft Tip with Kel-F	• Nil : Standard black phenolic Knop • BH: Stainless Round Bar Handle	• Nil : Standard • SG: Sour Gas Service	• S6 : 316 Stainless Steel • BS : Brass • MO: Alloy 400

SBNV60 Series 6000psi Integral Bonnet Bar Stock Needle Valves

Features

- Pressure rating up to 6000psi(413bar)@100°F(38°C).
- Temperature rating from -65°F(-53°C) to 450°F(232°C) with standard PTFE packing, and up to 600°F(315°C) with optional PEEK packing.
- Choice of materials : Standard S316 and available in alloy 400.
- Available Sour Gas service per NACE MR 0175.
- Every valve is 100% factory tested with the Nitrogen @1000psi (69bar).

Design

- Applications : General purpose gas, water and oil.
- Two-piece chevron-style PTFE stem packing design with compensating disc springs.
- Compact and rugged design.
- Variety stem tips include Vee, and Soft-seat with Kel-F.
- Orifice sizes : from 0.17in(4.3mm) to 0.25in(6.3mm).
- Flow Coefficients(Cv) : from 0.37 to 0.73.
- Bar stock body with straight and angle patterns.
- Stem threads are hard chrome-plated for maximum service life.
- Packing materials : Standard PTFE and optional PEEK packing for high temperature.
- Packing nut enables easy external adjustments to ensure leak-free stem seal.
- Variety of End connections include S-LOK, NPT & ISO threads Male/Female.
- Standard Bar Handle with S316.

Technical Data

• Temperature-Working Pressure

Description	Pressure(psig)@Temperature Rating		
	ANSI Group	2.2	3.4
	ANSI Class	2500	2500
	Materials	S316	Alloy 400
-65°F(-54°C)100°F(38°C)		6000	5000
200°F(93°C)		5160	4400
300°F(148°C)		4660	4120
350°F(176°C)		4470	4060
400°F(204°C)		4280	3980
450°F(232°C)		4130	3970

▸ Pressure ratings of valves with S-LOK end connections are determined by the tubing material and wall thickness. For more information about pressure ratings of valves with tube fitting end connections.

Note Pressure rating of valve is sometimes limited to the working pressure of pipe ends and the tubing connected.

• Temperature and Pressure Ratings

Body Material	Stem Tip	Temperature Rating	Pressure Rating @-65°Fto 100°F (-54°Cto 38°C)
316 Stainless Steel	Vee	-65°Fto 450°F (-54°Cto 232°C)	6000psig
	Soft Seat (Kel-F)	-65°Fto 200°F (-54°Cto 93°C)	
Alloy 400 (Monel)	Vee	-65°Fto 450°F (-54°Cto 232°C)	5000psig
	Soft Seat (Kel-F)	-65°Fto 200°F (-54°Cto 93°C)	

▸ The above ratings are for standard valve with PTFE packing. For optional packing materials, refer to the table shown below.

▸ Extreame temperature fluctuations may requlre packing adjustment.

• Temperature-Pressure Rating with Packing and Body Materials

Packing Material	Body Material	Temperature Rating	Pressure Rating Max. Temp.
PTFE (Standard)	316 Stainless Steel	-65°Fto 450°F (-54°Cto 232°C)	4130psig
	Alloy 400*		3970psig
PEEK	316 Stainless Steel	-65°Fto 600°F (-54°Cto 315°C)	3760psig
	Alloy 400*	-65°Fto 500°F (-54°Cto 260°C)	3960psig

* Not applicable over 500°F(260°C), PEEK is not recommended for service with aromatic heat transfer fluids or concentrated sulfuric and nitric acids.
▸Other limitations may apply.

• Flow Coefficient (Cv)-Number of Handle Turns

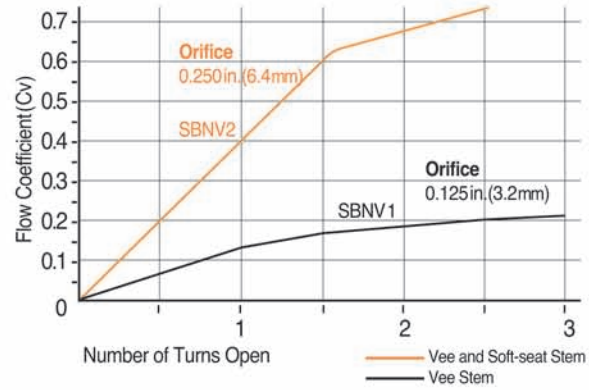

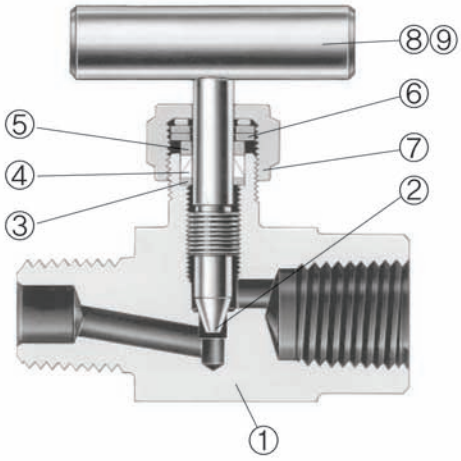

Materials of Construction

Item	Description		Material / ASTM Specification	
			S316	Alloy 400
1	Body		S316	Alloy 400/B564
2	Stem	Vee Stem	Chrome plated S316	Alloy R-405/B164
		Soft Seat Stem		
2a	Stem Tip (Soft Set)		Kel-F (PCTFE)	
3	Packing Ring		S316	Alloy R-405/B164
4	Packing		Standard PTFE, Optional PEEK	
5	Gland		S316	Alloy R-405/B164
6	Packing Spring		17-7PH	
7	Packing Nut		S316	
8	Bar Handle		S316	Alloy R-405/B164
9	Set screw		Stainless Steel	

Wetted parts are listed in orange color.
Standard Lubrication : Fluorocarbon based.

Inline pattern

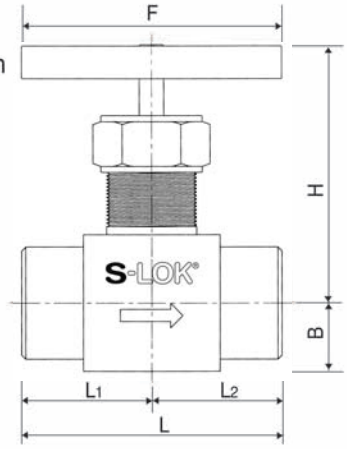

Angle pattern

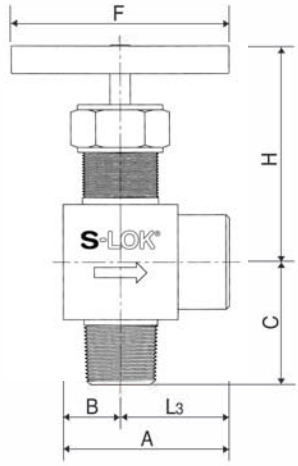

Ordering Information and Table of Dimensions

Valve Ordering Number		Orifice (mm)	Cv	End Connection Inlet	End Connection Outlet	Dimensions (mm) L	L1	L2	L3	A	B	C	H	F
SBNV1	F-4N	3.2	0.21	1/4″ Female NPT		47.8	23.9	23.9	25.4	36.6	11.2	25.4	42.2	44.5
	F-4R			1/4″ Male NPT										
	M-4N			1/4″ Male NPT		49.3	24.6	24.6	-	-		-		
	MF-4N			1/4″ Male NPT	1/4″ Female NPT	48.5	24.6	23.9	25.4	36.6		26.2		
	MS-4N4T			1/4″ Male NPT		55.8	24.6	31.2	28.7	39.9		26.2		
	S-4T			1/4″ S-LOK	1/4″ S-LOK	62.5	31.2	31.2	28.7	39.9		29.5		
SBNV2	F-6N	6.4	0.73	3/8″ Female NPT		63.5	31.8	31.8	31.8	48.6	16.8	31.8	58.7	64
	F-8N			1/2″ Female NPT								35.8		
	F-8R			1/2″ Female ISO										
	MF-6N			3/8″ Male NPT	3/8″ Female NPT							31.0		
	MF-8N			1/2″ Male NPT	1/2″ Female NPT	64.8	33.0					35.8		
	MF-12N8N			3/4″ Male NPT	1/2″ Female NPT	63.5	31.8		-	-		-		
	S-6T			3/8″ S-LOK		78.2	39.1	39.1	-	-		-		
	S-8T			1/2″ S-LOK		83.8	41.9	41.9	-	-		-		

Dimension shown are for reference only, subject to change.

• Sour Gas Service

-Sour Gas Service is provided to meet NACE Standard MR 0175.

• Handle

-Stainless Steel bar handle is standard all body valves.
-Black phenolic knop is standard for soft seat stem valves.

• Testing

-Every valve is factory tested for bubble-tight leakage at both seat and stem packing with nitrogen at 1000psi(69bar).
-Seats have a maximum allowable leak rate of 0.1 sccm **Hydrostatic Shell tests** is performed optional with water at 1.5 times the working Pressure.

• Safety in Valve Selection

-When selecting a valve, the total system design must be considered to ensure safe, trouble-free performance. Valve function, materials compatibility, adequate ratings, proper installation, operation, and maintenance are the responsibility of the system designer and user.

• Ordering Information

SBNV2	S	8T	A	R	SG	S6
Series Designator by Orifice Size	**End Connection Designator**	**Inlet-Outlet Size Designator**	**Flow Designator**	**Stem Designator**	**Sour Gas Designator**	**Body Material Designator**
			• Nil : Standard Pattern • A : Angle Pattern	• Nil : Vee Stem • K : Soft Tip with Kel-F • R : Regulating	• Nil : Standard • SG: Sour Gas Service	• S6 : 316 Stainless Steel • A400 : Alloy 400

SHNV100 Series 10000psi High Pressure Needle Valves

Product Information

Features

- Packing bolt allows external packing adjustment.
- Chevron PTFE packing design provides highly qualified sealing maintainability.
- Packing under the stem threads is to isolate threads from system fluid and lubricant washout.
- non-rotating stem tip at closure is used for long-life and leak-tight shutoff.
- Lock plate ensures the valve to be fastened to the body.
- NACE MR0175/ISO 15156-3 are applicable.

Pressure-Temperature Ratings

Body material	Packing material	Temperature Rating	Pressure Rating @38° C (100 F)	Pressure Rating @ Max, Temp
Stainless steel	PTFE	-54 to 232°C (-65 to 450°F)	689 bar (10,000 psig)	285 bar@232°C 4,130 psig@450°F
	Graphite	-54 to 648°C (-65 to 1200°F)		118 bar@648°C 1.715 psig@1,200°F
Carbon steel	PTFE	-29 to 176°C (-20 to 350°F)	689 bar (10,000 psig)	360bar@176 °C (5,230psig@350°F)
	Graphite	-29 to 176°C (-20 to 350°F)		

Material of Construction

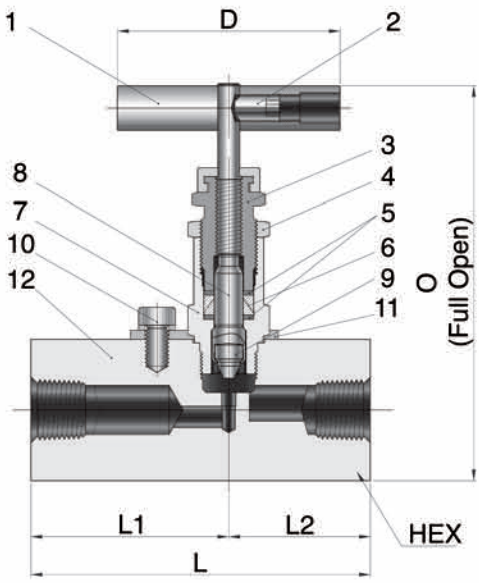

Component		Valve Body Materials	
		Stainless Steel	Carbon steel
		Grade/ASTM Specification	
1	Handle	Stainless Steel	Carbon steel
2	Set screw	S316/A276 or A479	Carbon steel
3	Packing bolt		C. Steel/JIS G4051
4	Lock nut		
5	Packing Ring	Reinforced PTFE	
6	Packing	Standard chevron PTFE packing, Optional Graphite	
7	Bonnet	S316/A276 or A479	C.STEEL/JIS G4051
8	Stem		S316/A276 or A479
9	Non-rotating stem disc	S630/A564	
10	Lock bolt	Stainless steel	
11	Lock plate		
12	Body	S316/A276 or A479	C.STEEL/JIS G4051 White zinc galvanized

Ordering Information and Dimensions

Basic Ordering NO.		End Connection		Orifice	Dimensions					in(mm)
		Inlet	Outlet	in(mm)	L	L1	L2	Hex.	D	O
SHNV1	F-4N	1/4 Female NPT		0.126 (3.2)	3 (76.2)	1.75 (44.4)	1.25 (31.8)	1.25 (31.8)	1.77 (45)	2.86 (72.7)
	F-6N	3/8 Female NPT								
SHNV2	F-8N	1/2 Female NPT		0.197 (5.0)	3 (76.2)	1.5 (38.1)	1.5 (38.1)	1.5 (38.1)	2.52 (64)	3.73 (94.8)
	MF-8N	1/2 Male NPT	1/2 Female NPT		3.75 (95.2)	2.25 (57.1)				
	MF-12N	3/4 Male NPT	3/4 Female NPT							

Product Information

How to Order

- To complete ordering number, add material designator S6 for 316 stainless steel or CS for carbon steel. Example SHNV2-F-8N-S6
- To order an optional, Graphite packing, insert GF to the ordering number. Example SHNV2-F-8N-GF-S6
- To order NACE applicable valve, insert SG to the ordering number. Example SHNV2-F-8N-GF-SG-S6

SHNV2	F	8N	GF	SG	S6
Series Designator by Orifice Size	**End Connection Designator**	**Inlet-Outlet Size Designator**	**Packing Designator** • Nil : Standard PTFE • GF: Graphite	**Sour Gas Designator** • Nil : Standard • SG: Sour Gas Service	**Body Material Designator** • S6 : 316 Stainless Steel • MO: Alloy 400

Factory Test

- Every valve is factory tested with nitrogen at 69 bar (1,000 psig) for the leakage from the seat to a maximum allowable leak rate of 0.1 Standard Cubic Centimeter per minute (SCCM).
- Stem packing is tested for the detection of no leakage.

Packing Adjustment and Actuation Torque

- Extreme or rapid temperature cycle while valve in service may require packing adjustment.
- Valves that have not been actuated for a period of time may have a higher initial actuation torque.

Safety in Valve Selection

- In selection of a valve, the design of the total system must be considered to ensure safe and trouble-free performance. The system designer and the user are responsible for valve function, material's compatibility, adequate ratings, proper installation, operation, and maintenance.

SUNV60 Series 6000psi Union Bonnet Needle Valves

Product Information

Features

- Pressure up to 6,000 psig(413 bar) @ 100°F(38 °C).
- High Temperatures up to 449°F(232 °C) with standard PTFE packing; up to 1,200°F(648°C) with Grafoil packing.
- Standard 316 stainless steel, optional Alloy 20, and Alloy C276 construction.
- Valve stem back seating against the bevelled edge of bonnet in fully open position prevents maximum leakage through bonnet when packing fails.
- Standard non-rotating stem disc and stem packing below the threads design.

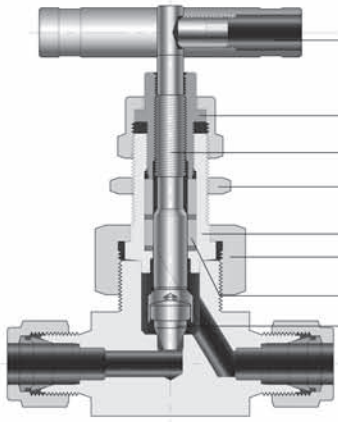

- Handle- Standard S316 bar handle.
- External Packing Bolt- allows packing adjustment without disassembling the valve..
- Roll threaded and hard chrome plated stem- is for extended valve's lifespan.
- Panel Mounting Nut- is standard and permits the access of the valve to panel or actuator.
- Union Nut- prevents accidental disassembly of the valve in its service.
- Stem Packing below the threads- prevents media contamination and thread lubricant washout.
- Non-Rotating Stem Disc at Closure- is to maximize the lifespan of the metal seat and complete sealing.

Materials of Construction

Component	Valve Body Materials		
	S316	Alloy 20	Alloy C276
	Material Grade/ASTM Specification		
1. Bar handle	S316/A276, optional anodized aluminum handle		
2. Set screw	Grade B8 TYPE 304/A193		
3. Packing bolt	S316/A276 or A479		
4. Cap nut	S316/A276 or A479		
5. Bonnet *	S316/A276 or A479	Alloy 20/B473	C276/B574
6. Gland	S316/A276 or A479	Alloy 20/B473	C276/B574
7. Packing *	PTFE/D1710, optional PEEK & Graphite		
8. Packing supports	Reinfoced PTFE		
9. Stem	Hard Chrome-plated S316/A276 or A479	Alloy 20/B473	C276/B574
10. Standard : Globe disc Optional : Ball disc, Regulating disc.	TYPE630/A564	Alloy 20/B473	C276/B574
11. Panel nut	S316/A276 or A479		
12. Union nut	S316/A276 or A479		
13. Body *	S316/A276 or A479	Alloy 20/B473	C276/B574

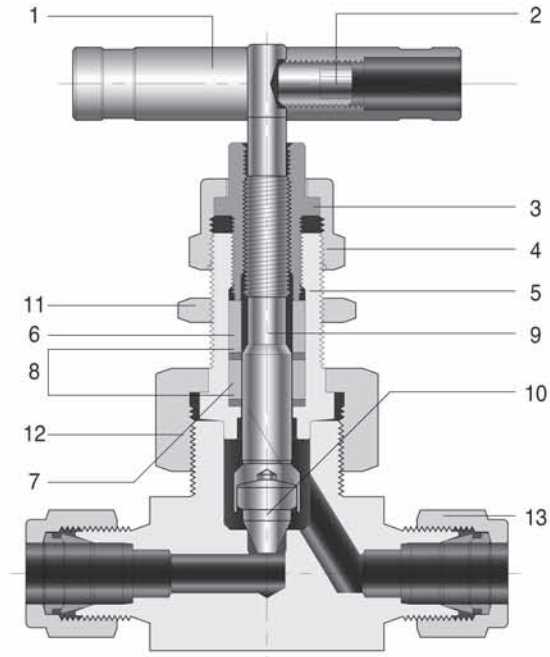

Note: * marked are wetted parts

Product Information

Table of Dimensions

In-Line pattern

Socket weld end

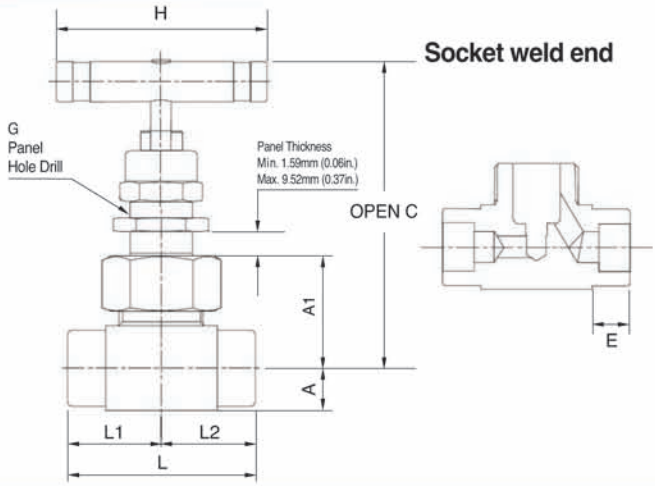

Basic Ordering Number			End Connections		Orifice	Cv	Dimensions mm							
			Inlet	Outlet	mm		L	L1	A1	A	H	G	C	E
SUNV1-	F	2N	1/8 F NPT		4.0	0.35	50.8	25.4	27.7	9.7	44.4	15.1	77.2	-
	F	4N	1/4 F NPT				52.3	26.2	27.7	9.9	44.4	15.1	77.2	-
	M	4N	1/4 M NPT				50.8	25.4	27.7	9.7	44.4	15.1	77.2	-
	MF	4N	1/4 M / F NPT				51.6	26.2	27.7	9.9	44.4	15.1	77.2	-
	S	6M	6 mm S-LOK				61.0	30.5	27.7	9.7	44.4	15.1	77.2	-
	S	4T	1/4 S-LOK				61.0	30.5	27.7	9.7	44.4	15.1	77.2	-
	SW	4T	1/4 TSW				46.2	23.1	27.7	9.7	44.4	15.1	77.2	7.1
	S	8M	8 mm S-LOK				61.0	30.5	27.7	9.7	44.4	15.1	77.2	-
SUNV2-	F	4N	1/4 F NPT		6.4	0.86	57.2	28.4	34.0	12.7	63.5	19.8	94.0	-
	F	6N	3/8 F NPT				57.2	28.4	34.0	12.7	63.5	19.8	94.0	-
	S	10M	10 mm S-LOK				72.4	36.1	34.0	12.7	63.5	19.8	93.7	-
	S	6T	3/8 S-LOK				71.9	35.8	34.0	12.7	63.5	19.8	94.0	-
	S	12M	12 mm S-LOK				77.2	38.6	34.0	12.7	63.5	19.8	94.0	-
	S	8T	1/2 S-LOK				77.2	38.6	34.0	12.7	63.5	19.8	94.0	-
	SW	4P	1/4 PSW				57.2	28.4	34.0	12.7	63.5	19.8	94.0	9.7
	SW	6T	3/8 TSW				57.2	28.4	34.0	12.7	63.5	19.8	94.0	7.9
	SW	8T	1/2 TSW				57.2	28.4	34.0	12.7	63.5	19.8	94.0	9.7
SUNV3-	F	8N	1/2 F NPT		11.1	2.20	79.2	39.6	46.2	15.7	88.9	26.2	121	-
	F	12N	3/4 F NPT				82.6	41.1	48.5	19.8	88.9	26.2	124	-
	F	16N	1 F NPT				91.9	46.0	54.1	25.4	88.9	26.2	129	-
	MF	8N	1/2 M / F NPT				79.2	39.6	46.2	15.7	88.9	26.2	121	-
	MF	12N	3/4 M/ F NPT				82.6	41.1	48.5	19.8	88.9	26.2	124	-
	MF	16N	1 M/ F NPT				91.9	46.0	54.1	25.4	88.9	26.2	129	-
	S	12M	12 mm S-LOK				99.6	49.8	46.2	15.7	88.9	26.2	121	-
	S	8T	1/2 S-LOK				99.6	49.8	46.2	15.7	88.9	26.2	121	-
	S	12T	3/4 S-LOK				99.6	49.8	46.2	15.7	88.9	26.2	121	-
	S	16T	1 S-LOK				104	51.8	47.8	17.5	88.9	26.2	121	-
	SW	8P	1/2 PSW				79.2	39.6	47.8	17.5	88.9	26.2	123	9.7
	SW	8T	1/2 TSW				79.2	39.6	46.2	15.7	88.9	26.2	121	9.7
	SW	12T	3/4 TSW				79.2	39.6	46.2	15.7	88.9	26.2	121	11.2

Product Information

Table of Dimensions

Angle pattern

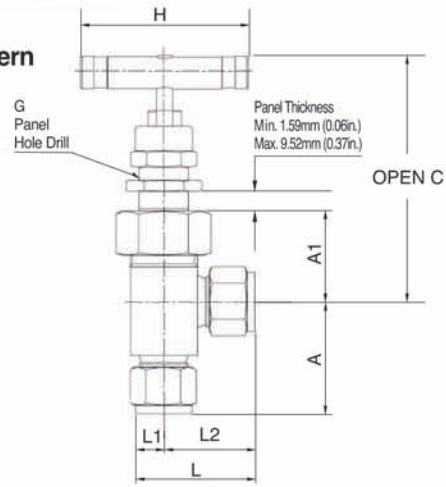

Basic Ordering Number			End Connections		Orifice	Cv	Dimensions mm							
			Inlet	Outlet	mm		L2	A	L	A2	L1	H	G	C
SUNV1-	F	2N	1/8 F NPT		4.0	0.35	22.6	25.4	32.3	32.5	9.7	44.4	15.1	82.0
	F	4N	1/4 F NPT				22.6	25.4	32.3	32.5	9.7	44.4	15.1	82.0
	M	4N	1/4 M NPT				25.4	25.4	35.1	27.7	9.7	44.4	15.1	77.2
	MF	4N	1/4 M / F NPT				22.6	25.4	32.3	32.5	9.7	44.4	15.1	82.0
	S	6M	6 mm S-LOK				29.5	37.6	39.1	27.7	9.7	44.4	15.1	77.2
	S	4T	1/4 S-LOK				29.5	37.6	39.1	27.7	9.7	44.4	15.1	77.2
	SW	4T	1/4 TSW				22.4	30.2	31.8	27.7	9.7	44.4	15.1	77.2
	S	8M	8 mm S-LOK				-	-	-	-	-	44.4	15.1	-
SUNV2-	F	4N	1/4 F NPT		6.4	0.86	25.4	28.4	38.1	37.3	12.7	63.5	19.8	97.0
	F	6N	3/8 F NPT				25.4	28.4	38.1	37.3	12.7	63.5	19.8	97.0
	S	10M	10 mm S-LOK				33.0	39.4	45.7	34.3	12.7	63.5	19.8	94.2
	S	6T	3/8 S-LOK				32.8	42.2	45.5	31.0	12.7	63.5	19.8	90.7
	S	12M	12 mm S-LOK				35.6	41.9	48.3	34.0	12.7	63.5	19.8	94.0
	S	8T	1/2 S-LOK				35.6	41.9	48.3	34.0	12.7	63.5	19.8	94.0
	SW	4P	1/4 PSW				25.4	28.4	38.1	37.3	12.7	63.5	19.8	97.0
	SW	6T	3/8 TSW				25.4	31.8	38.1	34.0	12.7	63.5	19.8	94.0
	SW	8T	1/2 TSW				25.4	25.4	38.1	35.6	12.7	63.5	19.8	95.5
SUNV3-	F	8N	1/2 F NPT		11.1	2.20	33.3	39.6	50.8	50.8	17.5	88.9	26.2	126
	F	12N	3/4 F NPT				-	-	-	-	-	88.9	26.2	-
	F	16N	1 F NPT				-	-	-	-	-	88.9	26.2	-
	MF	8N	1/2 M / F NPT				33.3	39.6	50.8	50.8	17.5	88.9	26.2	126
	MF	12N	3/4 M / F NPT				-	-	-	-	-	88.9	26.2	-
	MF	16N	1 M / F NPT				-	-	-	-	-	88.9	26.2	-
	S	12M	12 mm S-LOK				42.7	52.8	60.2	47.8	17.5	88.9	26.2	123
	S	8T	1/2 S-LOK				42.7	52.8	60.2	47.8	17.5	88.9	26.2	123
	S	12T	3/4 S-LOK				42.7	52.8	60.2	47.8	17.5	88.9	26.2	123
	S	16T	1 S-LOK				-	-	-	-	-	88.9	26.2	123
	SW	8P	1/2 PSW				33.3	39.6	50.8	50.8	17.5	88.9	26.2	126
	SW	8T	1/2 TSW				33.3	42.9	50.8	47.8	17.5	88.9	26.2	123
	SW	12T	3/4 TSW				-	-	-	-	-	88.9	26.2	-

Product Information

Technical Data

Valve Material	Stem Disc Designator	Temperature Rating °F(°C)	Pressure Rating @ -65 to 100°F (-53 to 38°C)
• S316 • Alloy 20 • Alloy C276	• Globe: Nil. • Regulating: R • Ball: B	-65 to 449 (-53 to 232)	6,000 psig (413 barg)

Globe Disc Ball Disc Regulating Disc

- The above ratings are for a standard valve with PTFE packing. For optional packing materials, refer to the table show below.
- Extreme temperature fluctuations may require packing adjustment accordingly.

Packing and Body Materials & Temperature and Pressure Rating

Packing Material	Body Material	Temperature	Pressure @ Temp Rating
PTFE (Standard)	S316	-65°F ~ 450°F (-54°C ~ 232°C)	4,130 psig
	Alloy20		3,970 psig
PEEK	S316	-65°F ~ 600°F (-54°C ~ 315°C)	3,760 psig
	Alloy20	-65°F ~ 500°F (-54°C ~ 260°C)	3,960 psig
Graphite	S316	-65°F ~ 1,200°F (-54°C ~ 648°C)	1,715 psig
	Carbon Steel	-20°F ~ 350°F (-29°C ~ 176°C)	5,230 psig
	Alloy20	-65°F ~ 500°F (-54°C ~ 260°C)	3,960 psig

Note :
Applicable over 500 °F (260 °C).
PEEK is not recommended for service with aromatic heat transfer fluids or concentrated sulfuric and nitric acids.
Other limitations may apply.

Pressure-Temperature Ratings

Temperature	Pressure (psig) @ Temperature Rating			
	ANSI Group	2.2	NA	3.4
	Materials	S316	Carbon Steel *	ALLY20
	ANSI Class	2,500	NA	2,500
-65°F(-54°C)	100°F(38°C)	6,000	6,000	5,000
	200°F(93°C)	5,160	5,420	4,400
	300°F(148°C)	4,660	5,320	4,120
	350°F(176°C)	4,770	5,230	4,050
	400°F(204°C)	4,280	-	3,980
	450°F(232°C)	4,130	-	3.970

- Rated at a low temperature of -20°F (-29°C)
- To determine kPa, multiply psig by 6.89 and multiply barg by 100
- When valves with S-lok fitting's end connections are connected to tubing, the working pressure of tubing must be considered in the calculation of total system working pressure

Product Information

Sour Gas Service

- Valves for use in sour gas are available. Valves' wetted components are selected to the requirements of NACE MR0175 for sulfide stress cracking resistant materials. To order, insert -SG in the basic ordering number.

Handles

- S316 bar handle is standard. Optionally, anodized black aluminum bar handle is available.
- To order handle for field assembly, select desired handle ordering number from the table.

Testing

Flow Data @ 100°F (38°C) for valves with regulating disc

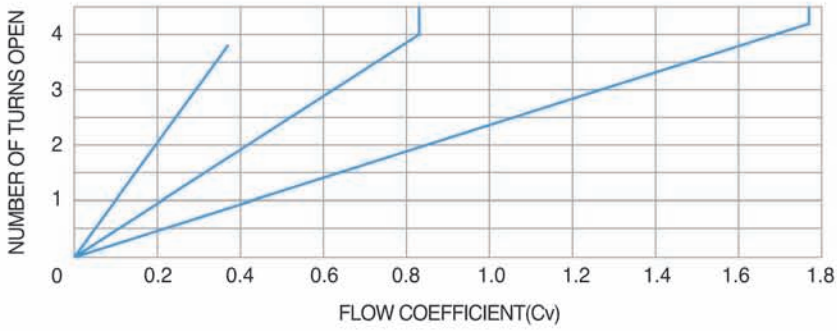

- Valve with standard globe and ball disc is designed to be used in a fully open or fully closed position.

Testing

SUNV1-F-4N	A	PK	B	SG	S6
Series Designator	**Valve Pattern Designator**	**Packing Material Designator**	**Stem Disc Designator**	**Sour Gas Designator**	**Valve Material Designator**
• Basic Ordering Number	• Nil : In-line • A : Angle	• Nil : PTFE • PK : PEEK • GF :Graphite	• Nil : Globe • R: Regulating • B: Ball	• Nil: no Sour Gas • SG: Sour Gas	• S6: S316 • A20: Alloy 20 • C276: Alloy C276

Safe Valve Selection

The selection of a valve for any application or system design must be considered to ensure safe performance.
Valve function, valve rating, material compatibility, proper installation, operation and maintenance remain the sole responsibility of the system designer and the user. S-LOK accepts no liability for any improper selection, installation, operation or maintenance.

STV Series

Features

- Pressure rating up to 5000psig(344bar)@100°F(38°C).
- Temperature rating from -65°F(-54°C) to 450°F(232°C) with standard PTFE packing, and up to 600°F (315°C) with optional PEEK packing.
- Choice of materials : Standard S316 and Brass.

Pressure & Temperature Ratings

Valve Material	Stem	with PTFE packing (Standard)		with PEEK packing (Optional)	
		Temperature Rating	Pressure Rating @100°F (38 °C)	Temperature Rating	Pressure Rating @100°F (38 °C)
Stainless steel	Metal to metal	-65 to 450°F (-54 to 232°C)	5,000psig (344bar)	-65 to 600°F (-54 to 315°C)	3,130psig (215bar)
Brass	Metal to metal	-65°F to 400°F (-54°C to 204°C)	3,000psig (206bar)	-65°F to 400°F (-54°C to 204°C)	3,000psig (206bar)

Testing

- Every Test Cock valve is factory tested with Nitrogen@1,000psig(69bar) for leakage at the seat to a maximum allowable leak rate of 0.1 SCCM.

Sour Gas Service

- For use valve in sour gas, materials for wetted components are selected in accordance with NACE MR0175 latest revision.

Ordering Information

- Selection the applicable options from designators listed below.

STV-S-6M

Series Designator

SG

Sour Gas Designator
Nil : Standard
SG : Sour Gas Service

S6

Body Material
S6 : 316 Stainless Steel
BS : Brass

Product Information

Product Variations

BITE TYPE

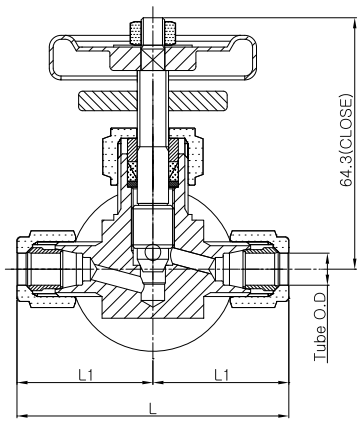

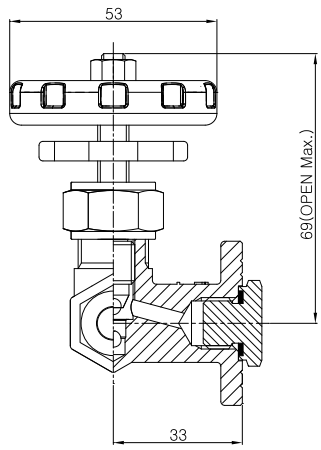

LOK TYPE

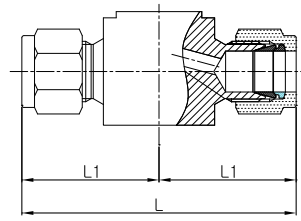

THREAD TYPE

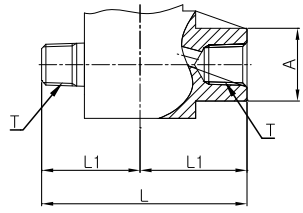

BITE-JIS Type Tube Fittings

(Unit : mm)

Designations	Tube O.D	L1	L	Max.Pressure(bar)	
				S316	Brass
STV-B-06M	6	32.8	65.6	340	40
STV-B-08M	8	35.8	71.6	340	40
STV-B-10M	10	36.8	73.6	340	40
STV-B-12M	12	37.8	75.6	340	40

Male Thread Type Tube Fittings

(Unit : mm)

Designations	T	L1	L	Max.Pressure(bar)	
				S316	Brass
STV-M-02R	PT 1/4”	28	56	450	40
STV-M-03R	PT 3/8”	29	58	450	40

LOK Type Tube Fittings

(Unit : mm)

Designations	Tube O.D	L1	L	Max.Pressure(bar)	
				S316	Brass
STV-S-6M	6	31.7	63.4	450	40
STV-S-8M	8	32.6	65 2	450	40
STV-S-10M	10	33.5	67	450	40
STV-S-12M	12	36	72	450	40
STV-S-2T	1/8”	29.2	58.4	450	40
STV-S-4T	1/4”	31.7	63.4	450	40
STV-S-6T	3/8”	33.2	66.4	450	40
STV-S-8T	1/2”	36	72	450	40

Female Thread Type Tube Fittings

(Unit : mm)

Designations	T	A	L1	L	Max.Pressure(bar)	
					S316	Brass
STV-F-02R	PT 1/4”	17	25	50	450	40
STV-F-03R	PT 3/8”	22	32	64	450	40

MEMO

MEMO

HanSun Engineering Co., Ltd. Catalogue_Needle Valves & T.Cock_201703

27 Noksansandan361-ro, Gangseo-gu
(Songjeong-dong), Busan, Korea
Tel : +82-51-899-6700, Fax : +82-51-899-6799
E-Mail : overseas@ehansun.co.kr
sales@ehansun.co.kr
Website : www.ehansun.co.kr, www.slok.co.kr